IoTbase Nano

Arduino Nano Base Module

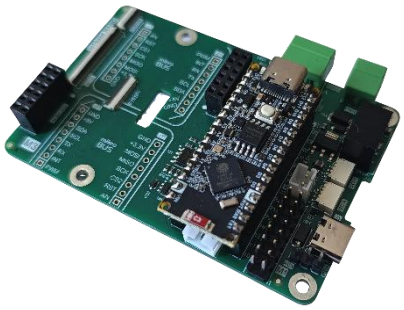

IoTbase Nano module (rev. 3.06) is designed for installing **Arduino Nano** format modules, mezzanine modules, and **mikroBUS™** modules.
The **IoTbase Nano** module has an **EEPROM** for storing configuration and user data. The **EEPROM** capacity is either 8 Kbit or 64 Kbit.
The module's input power is non-isolated, ranging from 9VDC to 36VDC. This power can be supplied via a 2-pin terminal block with a 3.5mm pitch. The module can also be powered with 5VDC through the **USB** connector.

The module has the following slots:

- **NANO** (**P1** and **P2** connectors) for installing **Arduino Nano** format modules
- **HOST-P12** and **HOST-S12** for installing **IoTextra** series mezzanine modules
- **M1** connector and two slots (**M2** and **M3**), compatible with **mikroBUS™**, but the **M2** and **M3** slots are covered by the mezzanine module when it is installed

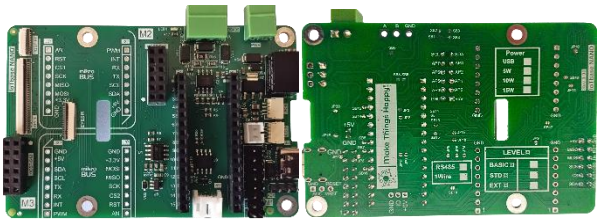

The **I²C** interface is often used when designing devices and instruments based on the **IoTbase Nano** module, so the module has two Qwiic© connectors for connecting to other modules via the **I²C** bus, which can be used to connect external devices and sensors. By default, pull-up resistors for **I²C** are connected, but they can be disconnected.
The **IoTbase Nano** module optionally supports the **RS-485** protocol. For this purpose, the module has a chip compatible with popular half-duplex **RS-485** transceivers. Speeds are up to 10Mbps.
The module can also optionally support the **1-Wire** bus.
The module is equipped with **EYESPI** connectors for connecting various displays with this bus and a 40-pin **RPI40** connector with pins corresponding to the widely used 40-pin **Raspberry Pi** connector, which can be used to organize inter-module connections.
The module has a **Watchdog** based on the **TPS3828**.
The input voltage of 9VDC to 36VDC is converted to 5VDC by a converter. Depending on the type of converter installed, the maximum current can be 1A, 2A, or 3A.
The module also has a DC-DC converter from 5VDC to 3.3VDC. The maximum current for elements connected to the 3.3VDC voltage is 1A.
Since some of the modules installed in the **NANO** slot and modules connected to **M1** (**mikroBUS™** connector) can themselves generate 5VDC and 3.3VDC, the **IoTbase Nano** module provides the ability to flexibly manage these connections using jumpers on its bottom side.
The module size is 85×56 mm. The module format corresponds to the popular **Raspberry Pi B** board format, which greatly simplifies its use.
Primary applications of the module:

- Industry IoT
- Distributed Data Acquisition Systems
- Motor control
- Heating, Ventilation, & Air Condition Monitoring (HVAC)
- Smart sensors
- PLC
- Smart home
- Consumer electronics

QUICK START

The **IoTbase Nano** module is most often used with one or another **IoTextra** series mezzanine, as together with an installed mezzanine and a **Arduino Nano** format module, it is easy to use as a standalone device. The

following photos show the **IoTbase Nano** module with various mezzanines and microcontrollers (in the **Arduino Nano** format, except for those whose signal level in the **NANO** slot is 5V):

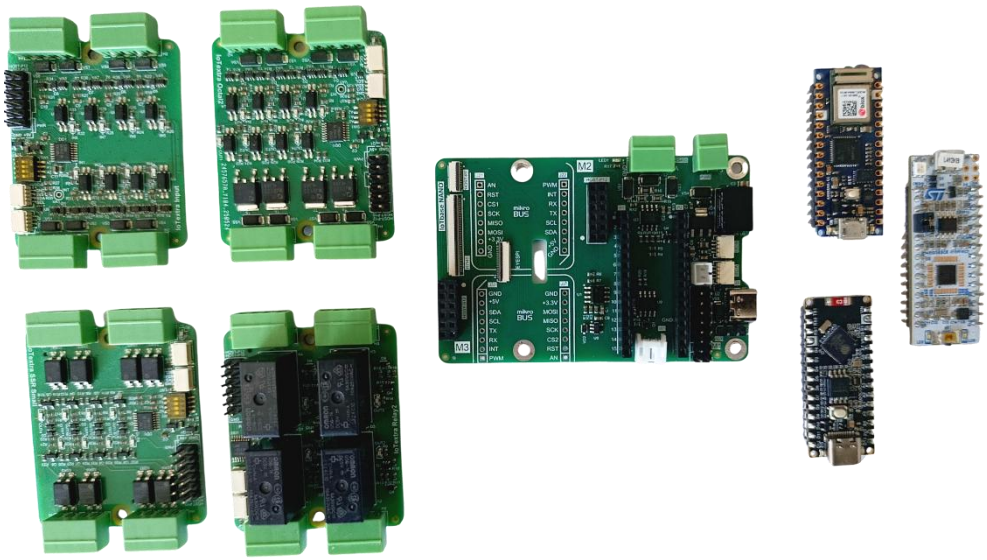

Warning! You must pay attention to the orientation of the modules installed in the **NANO** slot. In the **NANO** slot, pin "1" faces the RS-485 connector, and the SWD or antenna should be on the edge of the module. Incorrect installation can destroy the **IoTbase Nano** and Arduino compatible modules.

The **M1** connector and **M2-M3** slots allow the use of more than 2000 MikroElekronika **Click®** modules with the **mikroBUS™** bus:

To install **Click®** modules into the **mikroBUS™** slot, you don't need to do anything with the jumpers on the **IoTbase Nano** module (you can use the default settings for all jumpers on the module).
Numerous sensors, peripherals, and **Qwiic©**-compatible modules can also be easily connected to the **IoTbase Nano** via the **I²C** connectors:

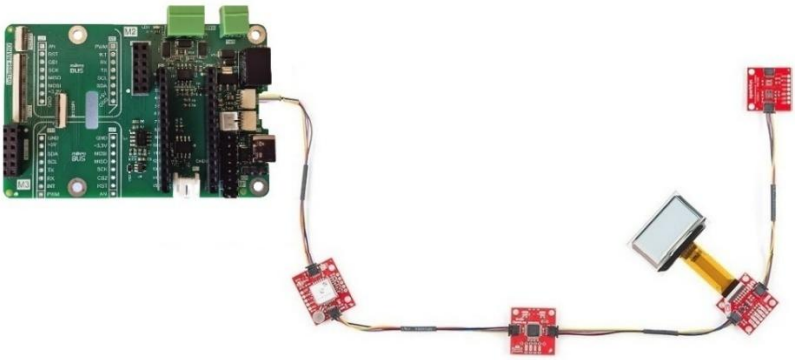

DESCRIPTION

The **IoTbase Nano** module has:

- **P1** and **P2** connectors of the **NANO** slot
- **M1** connector for the **mikroBUS™** bus and **M2** and **M3** slots (not installed, but can be self-installed by the user)

- **I2C-A** and **I2C-B** connectors for the main **I²C** bus (I2C0)
- **EYESPI** connector for connecting to a display and other modules via an FFC cable
- **HOST-P12**, **HOST-S12**, and **HOST-PF** connectors for connecting to mezzanines (**HOST-PF** requires an FFC cable)
- **AUX** auxiliary connector
- **RS485** with a non-isolated RS-485 interface
- **1-Wire** bus with **W1** connector
- **PWR** power connector for 9-36VDC power
- **USB** power connector for 5VDC power via USB TYPE-C
- **EEPROM**
- Watchdog based on **TPS3828**

NANO slot. This slot consists of two 15-pin connectors (**P1** and P2). The following **Arduino Nano** compatible modules can be installed into this **IoTbase Nano** module slot:

- Arduino Nano 33 IoT
- Arduino Nano 33 BLE Rev2
- Arduino Nano RP2040 Connect
- Arduino Nano ESP32
- Arduino® Nano R4
- Arduino Nano Matter
- Waveshare ESP32-S3-Nano
- STM32 Nucleo

Slot structure:

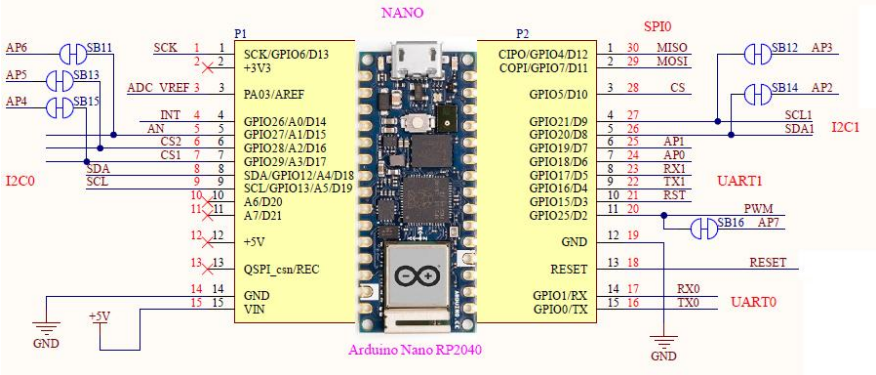

As an example, we provide the pinout of the Arduino Nano 33 IoT and Arduino Nano RP2040 Connect:

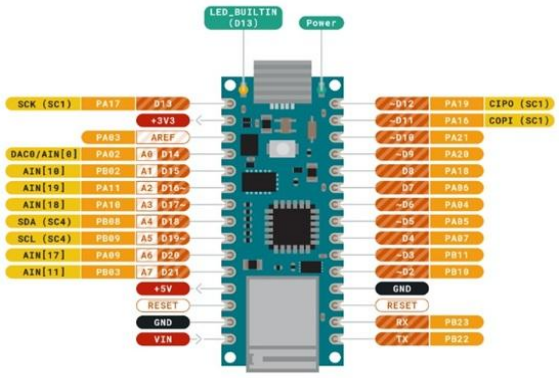

Arduino Nano 33 IoT pinout

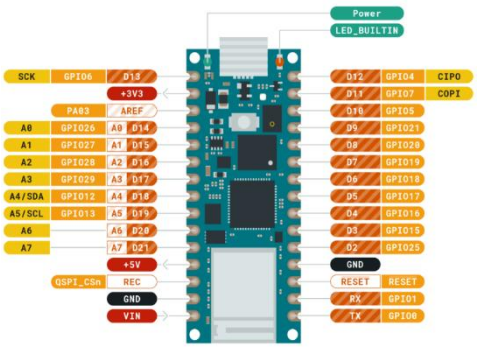

Arduino Nano RP2040 Connect pinout

RPI40 Connector. This connector is for connecting to other modules using a 40-pin FFC cable. The connector structure corresponds to the standard **Raspberry Pi** header connector, but a breakout board, such as the one in the picture, will be required to connect to it. Connector pinout:

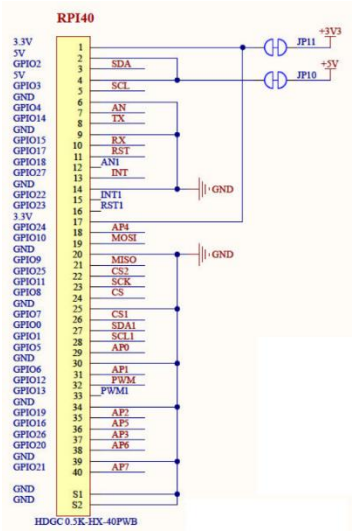

[mikroBUS™](#) Connector and Slots. The module has an **M1** connector and space for installing **M2** and **M3** slots, which comply with the **mikroBUS™** standard. The **M2** and **M3** slots are only accessible from the top side of the module if a mezzanine is not installed. The **M2** and **M3** slots face different sides of the module.
Only an **"S"** format **mikroBUS™** module that does not extend beyond the edge of the module can be installed in the **M2** slot.

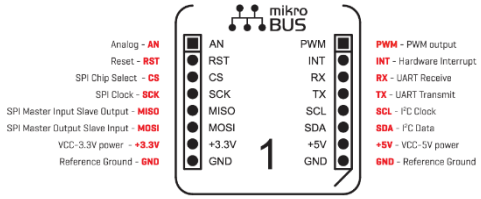

All **M1**, **M2**, and **M3** signals are the same except for **CS**. **M1** uses **CS**, **M2** uses **CS1**, and **M3** uses **CS2**.
You should also pay attention to the pin arrangement of the **M1** connector:

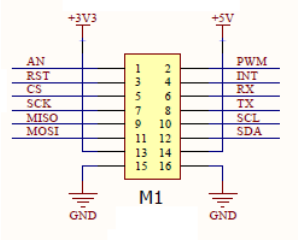

Warning! Pins 1 and 2 of the **M1** connector and **M3** slot are at the edge of the module. Incorrect connection to them can lead to the destruction of the **IoTbase Nano** and **Arduino Nano** modules.
Pin 1 of the **M1** connector is indicated on the top side of the module.

[Qwiic©](#) Connectors. The **I2C-A** and **I2C-B** connectors are compatible with **Qwiic®** and have the following structure:

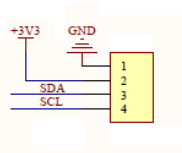

EYESPI Connector. The module's top side has an **EYESPI** connector. It is intended for communication with displays (indicators) using an 18-pin FFC cable. Communication with indicators is achieved due to compatibility with the 18-pin **EYESPI Cable** used by **Adafruit**. The standardization of this cable allows the following displays to be connected:

- 2.0" 320x240 Color IPS TFT Display with microSD Card Breakout
- 2.2" 18-bit color TFT LCD display with microSD card breakout
- 1.8" Color TFT LCD display with MicroSD Card Breakout
- OLED Breakout Board - 16-bit Color 1.5" w/microSD holder
- OLED Breakout Board - 16-bit Color 1.27" w/microSD holder
- Adafruit 2.7" Tri-Color eInk
- Adafruit 1.54" Monochrome eInk

Waveshare 2” Capacitive Touch Display Module can also be connected to this connector using an 18-pin FFC cable.

Here is the correspondence between the module's signals and the signals in the **EYESPI** connector:

EYESPI		Signals on the IoTbase PICO schematic
pin #	NAME	
1	VCC	+3V3
2	BACKLITE	PWM
3	GND	GND
4	SCK	SCK
5	MOSI	MOSI
6	MISO	MISO
7	DC	RX
8	RESET	RST
9	DISP_CS	TX
10	SD_CS	CS
11	MEM_CS	CS2
12	TC_CS	AN
13	SCL	SCL
14	SDA	SDA
15	INT	INT
16	GP1	SDA1
17	GP2	SCL1
18	BUSY/TE	CS1

HOST Connectors. These connectors are for connecting to application mezzanine modules that are installed on the top side of the **IoTbase Nano** module. The **IoTbase Nano** module has three **HOST** connectors: **HOST-P12**, **HOST-S12**, and **HOST-PF**.

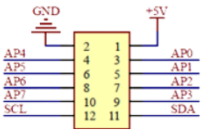	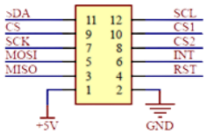	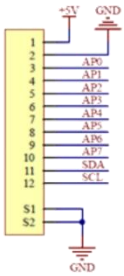
HOST-P12 Connector	**HOST-S12** Connector	**HOST-PF** Connector

AUX Auxiliary Connector. The structure of this connector for receiving external signals is as follows:

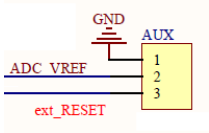

ext_RESET signal is a signal from an external (for example, on the device case panel) button.

RS485. The module optionally has a **UART ←→ RS-485** converter for communication with external devices via the **RS-485** interface. Control is carried out via the UART1 bus (by default) or UART0. The choice is made using jumpers **SB5**, **SB6**, **SB7**, and **SB8** on the bottom side of the **IoTbase Nano** module. The data rate is from 300 to 500000 bps. It is possible to connect a 120 Ohm resistance between lines A and B using jumper **SB9** (the resistance is disconnected by default). Circuit solutions that comply with IEC 61000-4-2 are used to protect against voltage transients: ESD 30 kV (air), 30 kV (contact).

The external **RS485** connector for the RS-485 interface has the following structure:

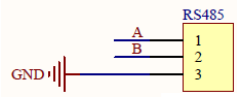

1-Wire. The module optionally has an **I²C ←→ 1-Wire** bridge for communication with external devices that have a **1-Wire** bus. The **DS2482-100** chip used as a bridge is a **1-Wire** master for any connected **1-Wire** slave device. The external **W1** connector for the **1-Wire** bus has the following structure:

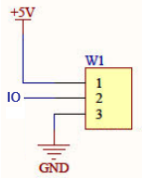

EEPROM. To store configuration and other user information, the **IoTbase Nano** module has an 8 Kbit, 1024×8 bits **EEPROM** (M24C08 or compatible) or 64 Kbit, 8192×8 bits (M24C64 or compatible).

The **I²C** address for the **EEPROM** is determined by the type and for 64 Kbit the default is 0x57. This address can be changed by the user using jumpers on the bottom-side.

Watchdog. It is based on the **TPS3828** with a fixed delay time of 200ms.

POWER SUPPLY

The module's input power is non-isolated, ranging from 9VDC to 36VDC. This power can be supplied via a 2-pin terminal block with a 3.5mm pitch (**PWR** connector). Protection against incorrect input power polarity is also provided.
The module can also be powered with 5VDC via the **USB** connector (labeled **J3** on the module's schematic). This is a USB TYPE-C connector.
All power inputs are protected against voltage transients caused by lightning and other factors. The protection level is in accordance with IEC-61000-4-2: ESD 30 kV (air), 30 kV (contact).
The input voltage of 9VDC to 36VDC is converted to 5VDC by a converter. Depending on the type of converter, the maximum current can be 1A, 2A, or 3A. The converter type is an option selected when purchasing the module.
The module also has a DC-DC converter from 5VDC → 3.3VDC. The maximum current for elements connected to the 3.3VDC voltage is 1A.
The 5VDC voltage can be distributed to other modules or received externally via the **J4** connector.

SIGNAL MATCHING

The **IoTbase Nano** module combines the **Arduino Nano**, **mikroBUS™**, **EYESPI** connector bus (for communication with displays and other modules), and **HOST** (for communication with mezzanines) buses. The correspondence between the signals of the various buses in the **IoTbase Nano** module is shown in the following table:

	Schema	P1	P2	RP2040	mikroBUS		HOST		EYESPI	
					LEFT	RIGHT	P12	S12	pin #	NAME
UART	TX		15	GPIO00		TX			9	DISP_CS
	RX		14	GPIO01		RX			7	DC
	TX1		9	GPIO16					16	GP1
	RX1		8	GPIO17					17	GP2
I2C	SDA	8		GPIO12		SDA	SDA	SDA	14	SDA
	SCL	9		GPIO13		SCL	SCL	SCL	13	SCL
	SDA1		5	GPIO20						
	SCL1		4	GPIO21						
SPI	SCK	1		GPIO06	SCK			SCK	4	SCK
	MOSI		2	GPIO07	MOSI			MOSI	5	MOSI
	MISO		1	GPIO04	MISO			MISO	6	MISO
	CS		3	GPIO05	CS			CS	10	SD_CS
	CS1	7		GPIO29				CS1	18	BUSY/TE
	CS2	6		GPIO28				CS2	11	MEM_CS
RST	RST		10	GPIO15	RST			RST	8	RESET
	RESET		13	RUN						
PWM	PWM		11	GPIO25		PWM			2	BACKLITE
INT & AN	INT	4		GPIO26		INT		INT	15	INT
	AN	5		GPIO27	AN				12	TC_CS
	ADC_VREF	3		AREF						
AP0-AP7	AP0		7	GPIO18			AP0			
	AP1		6	GPIO19			AP1			
	AP2		5	GPIO20			AP2			
	AP3		4	GPIO21			AP3			
	AP4	7		GPIO29			AP4			
	AP5	6		GPIO28			AP5			
	AP6	5		GPIO27			AP6			
	AP7		11	GPIO25			AP7			

For the **RX** and **TX** signals on the module, either the **RX0** and **TX0** signals from the **NANO** slot (direct connection) or the **TX0** and **RX0** signals (crossover connection) can be used. The connection type is set by jumpers **SB1-SB4**, with direct connection being the default.
Some pins **P1** and **P2** have dual purposes (they can be used in one of two ways in the module's schematic). Their purpose is selected using jumpers **SB11**, **SB12**, **SB13**, **SB14**, and **SB15**. These pins are marked with a gray background in the table, and their default usage is highlighted in **red**.

LAYOUT

Below is the layout of the elements on the top side of the **IoTbase Nano** module:

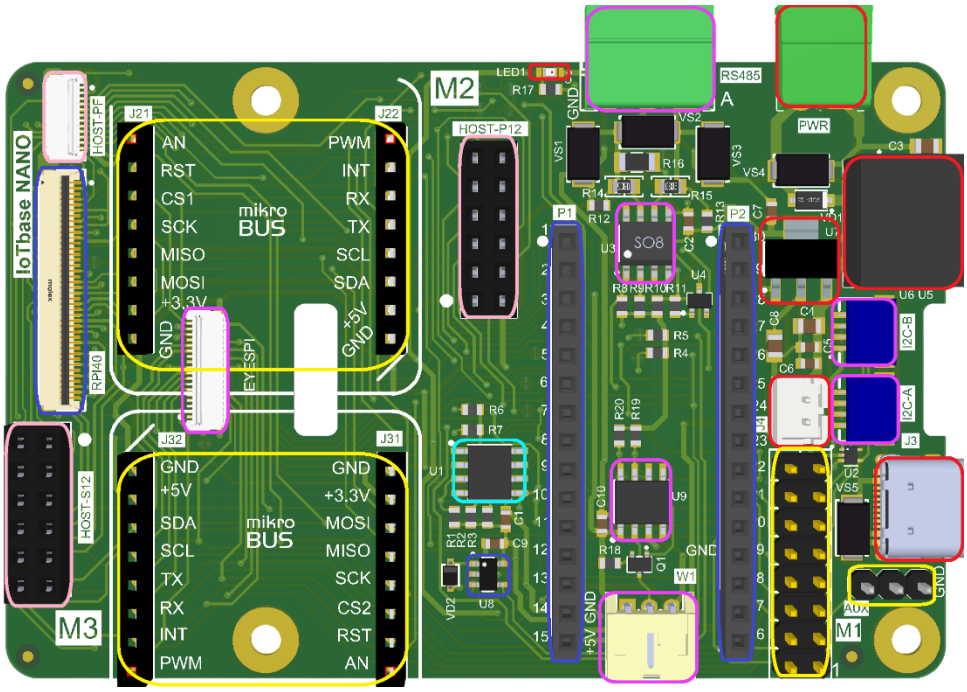

In this picture:

- **Red** highlights power-related elements (external **PWR** power connector, **USB** power connector, VCC -> 5VDC and 5VDC -> 3.3VDC converters, **J4** connector for 5VDC, and **LED** for 3.3VDC power indication)
- **Blue** highlights the **PICO** slot connectors, **RUN** button, 40-pin **RPI40** connector for the FFC cable, and the **Watchdog**
- **Yellow** highlights the **mikroBUS™** connector and slots (**M1**, **M2** and **M3**) and **AUX** connector
- **Pink** highlights the three HOST connectors for communication with mezzanines
- **Purple** highlights the **Qwiic®** connectors for connecting peripherals via the **I²C** bus, the RS-485 controller and external **RS485** connector, the 1-Wire controller and external **W1** connector, as well as the **EYESPI** connector for communication with displays
- **Light blue** highlights the **EEPROM**

The layout of the elements on the bottom side of the **IoTbase Nano** module is provided next.

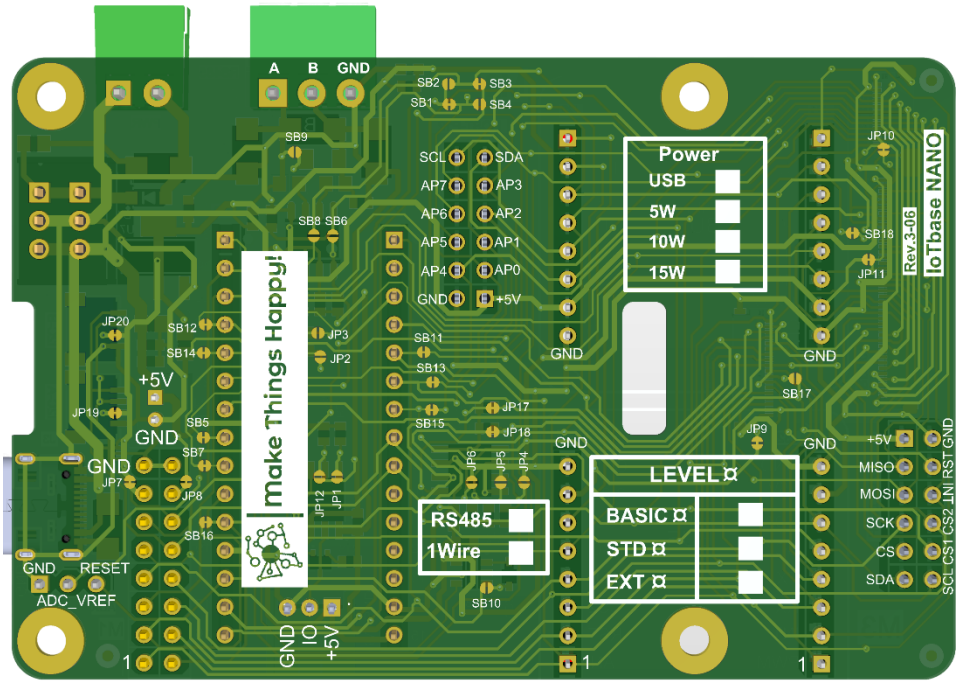

JUMPERS

All **IoTbase Nano** module jumpers are located on the bottom side:

1) **JP1 and JP12**. For selecting the address of the **DS2482-100** (**1-Wire**) chip on the **I²C** bus. By default, the address is 0011011x (all jumpers are open). The table for selecting the address is provided below.

JP12 (AD1)	JP1 (AD0)	Адрес для DS2482-100
CLOSE	CLOSE	0011000x
CLOSE	OPEN	0011001x
OPEN	CLOSE	0011010x
OPEN	OPEN	0011011x

2) **JP2 and JP3**. For connecting pull-up resistors to the SCL1 and SDA1 signals of the additional **I²C** bus (I2C1) of the **IoTbase Nano** module. By default, they are OPEN, meaning the resistors are not connected.
3) **JP4, JP5 and JP6**. For selecting the address of the 64 Kbit E**EPROM** chip on the **I²C** bus. By default, the address is 1010111x (all jumpers are open). The table for address selecting is provided below.

JP4 (E2)	JP5 (E1)	JP6 (E0)	EEPROM address
CLOSE	CLOSE	CLOSE	1010000x
CLOSE	CLOSE	OPEN	1010001x
CLOSE	OPEN	CLOSE	1010010x
CLOSE	OPEN	OPEN	1010011x
OPEN	CLOSE	CLOSE	1010100x
OPEN	CLOSE	OPEN	1010101x
OPEN	OPEN	CLOSE	1010110x
OPEN	OPEN	OPEN	1010111x

4) **JP7 and JP8**. They are designed to disconnect the +3V3 power (jumper **JP7**) and +5V power (jumper **JP8**) from the M1 slot with the **mikroBUS™** bus on the module. By default, power is connected (CLOSE).
5) **JP9**. **IoTbase Nano** module can be connected to displays (indicators) or other modules using FFC cables via the **EYESPI** connector. Jumper **JP9** allows for the disconnection of the +3V3 power supply. By default, the jumper is closed (CLOSE), and the +3V3 power is connected.
6) **JP10 and JP11**. They determine whether the module's +5V and +3V3 are connected to the **RPI40** connector, respectively. By default, they are CLOSE, meaning they are connected.
7) **JP17 and JP18**. For connecting pull-up resistors to the **SCL** and **SDA** signals of the main **I²C** bus (I2C0) of the **IoTbase Nano** module. By default, they are CLOSE, meaning the resistors are connected.
8) **JP19**. Determines whether the module's +3V3 is connected to the **Qwiic®** connectors (**I2C-A** and **I2C-B**, respectively). By default, it is CLOSE, meaning it is connected.
9) **SB1, SB2, SB3 and SB4**. The state of these jumpers determines the type of **UART** connection (default is direct connection).

SB1	SB2	SB3	SB4	Type of UART connection
CLOSE	OPEN	CLOSE	OPEN	Direct (RX0 <- RX, TX0 -> TX)
OPEN	CLOSE	OPEN	CLOSE	Cross (RX0 <- TX, TX0 -> RX)

10) **SB5, SB6, SB7 and SB8**. The state of these jumpers determines which **UART** channel is used for the RS-485 implementation (default is UART1).

SB5	SB6	SB7	SB8	UART Channel
OPEN	CLOSE	OPEN	CLOSE	UART (RX and TX)
CLOSE	OPEN	CLOSE	OPEN	UART1 (RX1 and TX1)

11) **SB9**. This jumper is for connecting a 120 Ohm resistance between the A and B lines of the **RS-485** bus. By default, the resistance is disconnected (jumper OPEN).
12) **SB10**. This jumper determines whether the **Watchdog** is enabled. It is disabled by default (jumper OPEN).
13) **SB11, SB12, SB13, SB14 and SB15**. Some pins **P1** and **P2** have dual purposes (they can be used in one of two ways in the module's schematic). These pins default usage is highlighted in **red**.

Schema		P1	P2	RP2040
SDA1	**AP2**		5	GPIO20
SCL1	**AP3**		4	GPIO21
CS1	**AP4**	7		GPIO29
CS2	**AP5**	6		GPIO28
PWM	**AP7**		11	GPIO25
AN	**AP6**	5		GPIO27

CONFIGURATION TABLES

On the bottom side of the module, configuration tables provide information about the configuration of a specific module instance.
The configuration tables indicate:

The module is available in three configuration **LEVEL**s:

LEVEL	Connectors				EEPROM	
	EYESPI	FFC	AUX	Watchdog	8 Kbit	64 Kbit
BASIC	NO	NO	NO	NO	YES	NO
STD	YES	NO	NO	NO	YES	NO
EXT	YES	YES	YES	YES	NO	YES

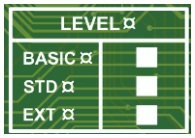

The method of powering the module: via the **USB** connector or the power of the installed DC to 5VDC input voltage converter on the module. Depending on the type of converter installed, the maximum current can be 1A, 2A, or 3A, which corresponds to converter power of 5W, 10W, and 15W. It should be noted that a delivery option without any power supply method can be chosen, but in this case, 5VDC can be supplied via the **J4** two-pin JST connector.

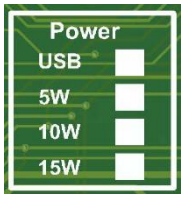

Whether the **IoTbase Nano** module has **RS-485** and/or **1-Wire** support

MEZZANINES

Any mezzanine from the **IoTextra** series listed on the website http://www.makethingshappy.io can be used as a mezzanine.
The following figures show the **IoTbase Nano** module with different mezzanines and microcontrollers:

		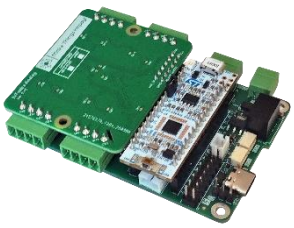
IoTbase Nano with **Waveshare ESP32-S3-Nano** and **IoTextra Octal2**	**IoTbase Nano** with **Waveshare ESP32-S3-Nano** and **IoTextra Input**	**IoTbase Nano** with **STM32 NUCLEO-L412KB** and **IoTextra Analog**

ACCESSORIES

The following accessories may be required to use the module:

- Mating (plug) two-pin connector for module power
- Mating (plug) three-pin connector for **RS-485**
- Two-pin cable with a JST connector for the **1-Wire** bus
- 10-pin cable for connecting the **IoTbase Nano** to **IoTextra** series mezzanines during debugging
- 12-pin FFC cable for **HOST-PF** connector
- **EYESPI** cable for connecting a display (indicator) or inter-module connection, 100mm or 200mm long
- 40-pin FFC cable for **RPI40** connector
- **I²C** cable with Qwiic© connectors on both ends of the cable